NOTES:FINISH (PLATING THICKNESS IN MICRO-INCHES)

1.BRASS PER QQ-B-626
2.PHOSPHOR BRONZE PER QQ-B-750
3.NICKEL PL.100 MIN. THICK OVER COPPER STRIKE
4.GOLD PL.3 MIN THICK OVER NICKEL PL.100 MIN. THICK OVER COPPER STRIKE

REVISIONS				
RevNo	Description	Date	Revision	Mender
1				
2				

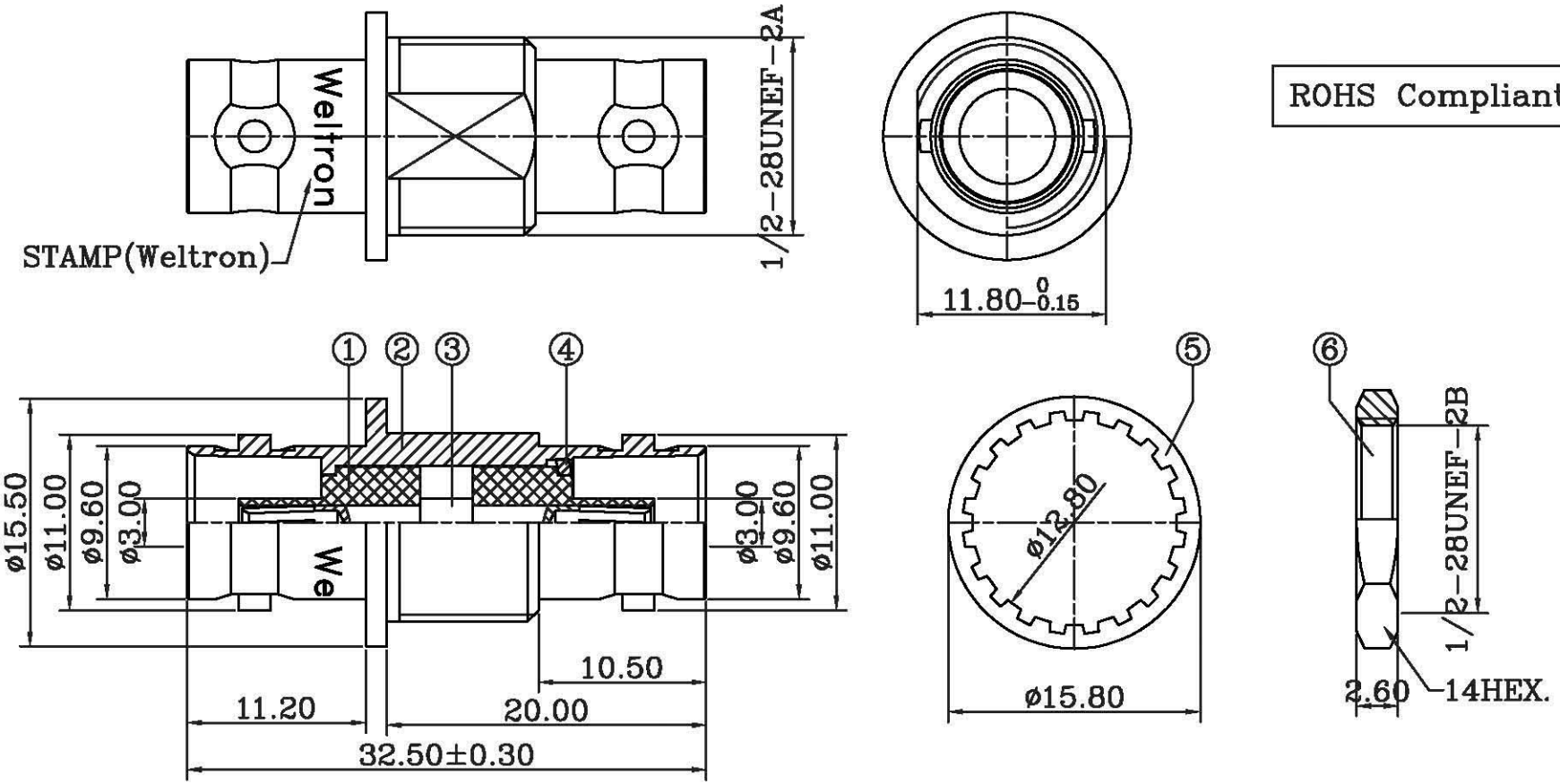

ITEM	DESCRIPTION	MATERIAL	Q'TY	FINISHED
6	NUT	NOTE 1	1	NOTE 3
5	LOCK WASHER	IRON	1	NOTE 3
4	WASHER	IRON	1	NOTE 3
3	CONTACT PIN	NOTE 2	1	NOTE 4
2	BODY	NOTE 1	1	NOTE 3
1	INSULATOR	POM	2	NATURAL

Weltron®

PART NO.	44-253-75	UNITS	MM
		SCALE	FIT
MODEL NO.			
		EDITION	A1
CAD FILE	Yin sheng/Yifaxing/SB/SB132		

TITLE

BNC DOUBLE FEMALE BULKHEAD ADAPTOR, 75 OHM

UNLESS OTHERWISE SPECIFIED TOLERANCES:
0.5-15 = ±0.15
15-30 = ±0.30
30-120 = ±0.60
>120 = ±1.00
ANGLES ±6°

PUBLISH DATE 2011/09/16

DESIGNED	NQ
DRAWING	NQ
CHECKED	David
APPROVED	Andy

3RD ANGLE