ROHS Compliant

REVISIONS				
RevNo	Description	Date	Revision	Mender
1				
2				

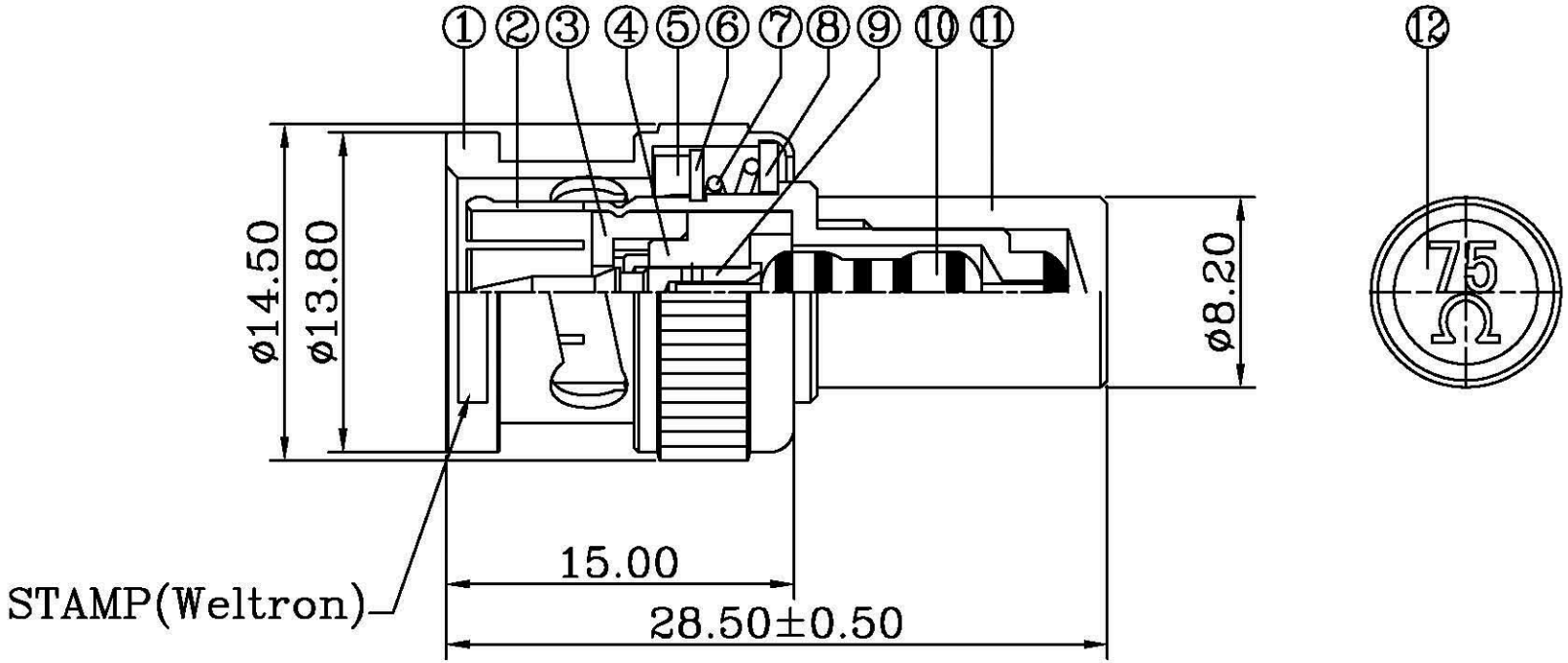

ITEM	DESCRIPTION	MATERIAL	Q'TY	FINISHED
12	PASTER	----	1	BLACK
11	COVER	NOTE 1	1	NOTE 2
10	RESISTOR	75 OHM 1 WATT ±1%		
9	CONTACT PIN	NOTE 1	1	NOTE 3
8	WASHER	IRON	1	NOTE 2
7	SPRING	65Mn	1	NATURAL
6	RETAINER RING	65Mn	1	NOTE 2
5	GASKET	RUBBER	1	RED
4	INSULATOR	POM	1	NATURAL
3	INSULATOR	POM	1	NATURAL
2	BODY	NOTE 1	1	NOTE 2
1	SHELL	NOTE 1	1	NOTE 2

NOTES:FINISH (PLATING THICKNESS IN MICRO-INCHES)
1.BRASS PER QQ-B-626
2.NICKEL PL.100 MIN. THICK OVER COPPER STRIKE
3.GOLD PL.3 MIN THICK OVER NICKEL PL.100 MIN. THICK OVER COPPER STRIKE

Weltron®				TITLE BNC MALE TERMINATOR(75 OHM 1 WATT ±1%)	
		UNITS	MM	UNLESS OTHERWISE SPECIFIED TOLERANCES: 0.5-15 = ±0.15 15-30 = ±0.30 30-120 = ±0.60 >120 = ±1.00 ANGLES ±5°	DESIGNED NQ
PART NO.	44-286-75	SCALE	FIT		DRAWING NQ
MODEL NO.					CHECKED David
DRAWING NO.		EDITION	A1	PUBLISH DATE	APPROVED Andy
CAD FILE	Yin sheng/Yifaxing/SB/SB116			2012/12/07	3RD ANGLE