ROHS Compliant

REVISIONS				
RevNo	Description	Date	Revision	Mender
1				
2				

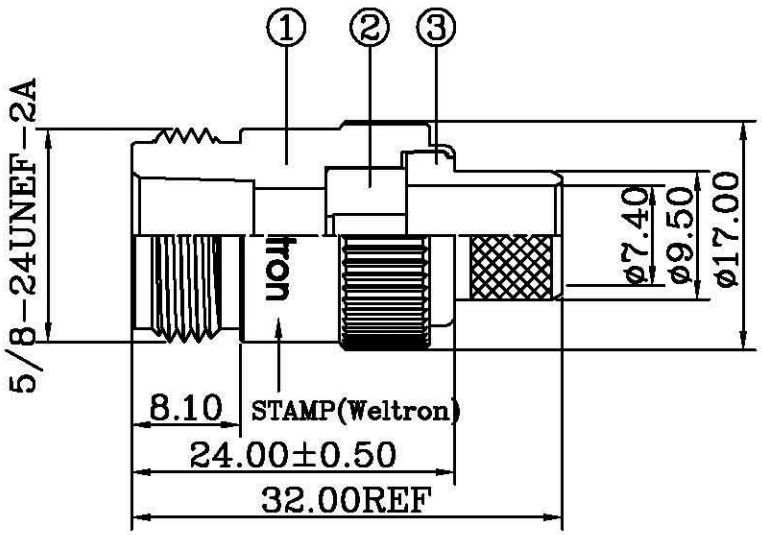

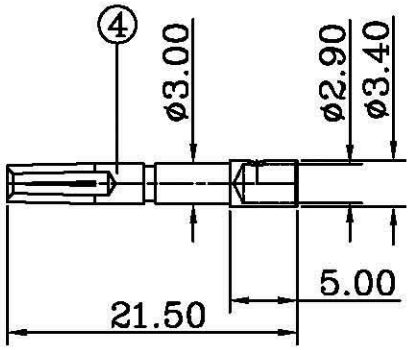

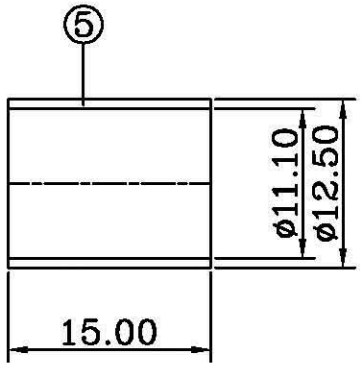

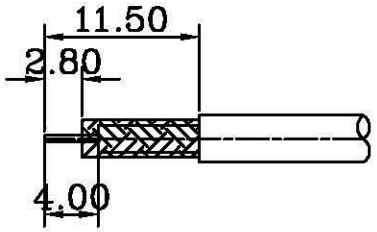

RECOMMENDED
CABLE STRIPPING DIM'S

1.CRIMPED FERRULE HEX CRIMP SIZE .429"
2. CRIMPED CONTACT PIN HEX CRIMP SIZE .100"

NOTES:FINISH (PLATING THICKNESS IN MICRO-INCHES)

1.BRASS PER QQ-B-626
2.SILVER PL.100 MIN. THICK OVER COPPER STRIKE
3.GOLD PL.3 MIN .THICK OVER NICKEL PL.100 MIN. THICK OVER COPPER STRIKE
4.TEFLON MIL-P-19468
5.JIS H 3250,C 2700

ITEM	DESCRIPTION	MATERIAL	Q'TY	FINISHED
5	FERRULE	NOTE 5	1	NOTE 2
4	CONTACT PIN	NOTE 1	1	NOTE 3
3	REAR BODY	NOTE 1	1	NOTE 2
2	INSULATOR	NOTE 4	1	NATURAL
1	BODY	NOTE 1	1	NOTE 2

weltron®

TITLE N CRIMP JACK CRIMP, 50 OHM FOR RG8U,RG214U,BELDEN 8267 CABLE

PART NO.	44-263-8	UNITS	MM
		SCALE	FIT
MODEL NO.			
		EDITION	A1
CAD FILE	Yin sheng/Yifaxing/Sn(N)/SN340		

UNLESS OTHERWISE SPECIFIED TOLERANCES:
0.5-15 = ±0.15
15-30 = ±0.30
30-120 = ±0.60
>120 = ±1.00
ANGLES ±5°

PUBLISH DATE 2010/01/03

DESIGNED	NQ
DRAWING	NQ
CHECKED	David
APPROVED	Andy

3RD ANGLE