ROHS Compliant

REVISIONS				
RevNo	Description	Date	Revision	Mender
1				
2				

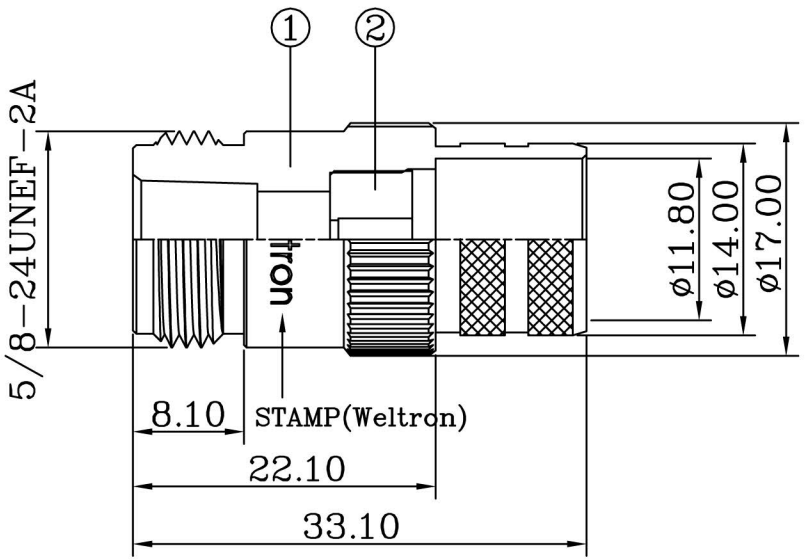

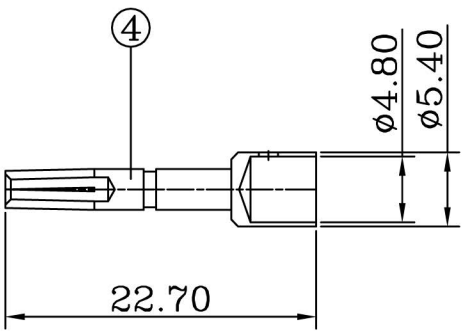

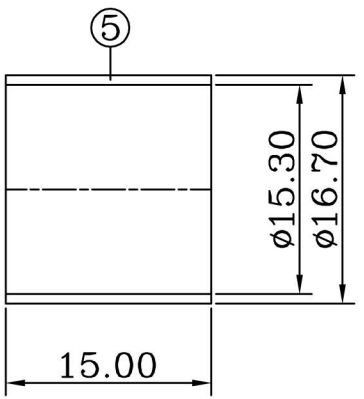

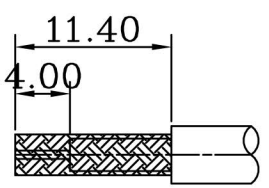

RECOMMENDED
CABLE STRIPPING DIM'S

1.CRIMPED FERRULE
HEX CRIMP SIZE .60"
2.CRIMPED CONTACT PIN
HEX CRIMP SIZE .187"
OR TO SOLDER

NOTES:FINISH (PLATING THICKNESS IN MICRO-INCHES)

1.BRASS PER QQ-B-626
2.SILVER PL.100 MIN. THICK OVER COPPER STRIKE
3.GOLD PL.3 MIN .THICK OVER NICKEL PL.100 MIN. THICK OVER COPPER STRIKE
4.TEFLON MIL-P-19468
5.JIS H 3250,C 2700

ITEM	DESCRIPTION	MATERIAL	Q'TY	FINISHED
4	FERRULE	NOTE 5	1	NOTE 2
3	CONTACT PIN	NOTE 1	1	NOTE 3
2	INSULATOR	NOTE 4	1	NATURAL
1	BODY	NOTE 1	1	NOTE 2

Weltron®

TITLE N CRIMP JACK CRIMP, 50 OHM FOR LMR600 CABLE

PART NO.	44-263-LMR600	UNITS	MM
		SCALE	FIT
MODEL NO.			
		EDITION	A1
CAD FILE	Yin sheng/Yifaxing/Sn(N)/SN340		

UNLESS OTHERWISE SPECIFIED TOLERANCES:
0.5-15 = ±0.15
15-30 = ±0.30
30-120 = ±0.60
>120 = ±1.00
ANGLES ±5°

PUBLISH DATE 2012/12/10

DESIGNED	Ckq
DRAWING	Ckq
CHECKED	David
APPROVED	Andy

3RD ANGLE