ROHS Compliant

REVISIONS				
RevNo	Description	Date	Revision	Mender
1				
2				

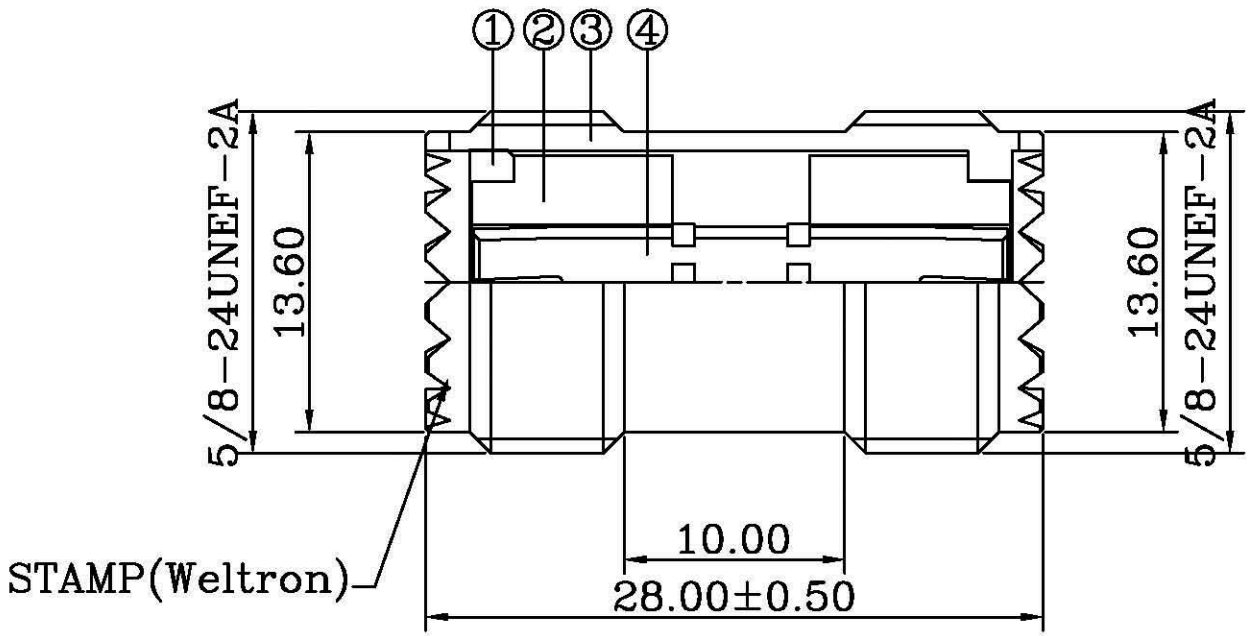

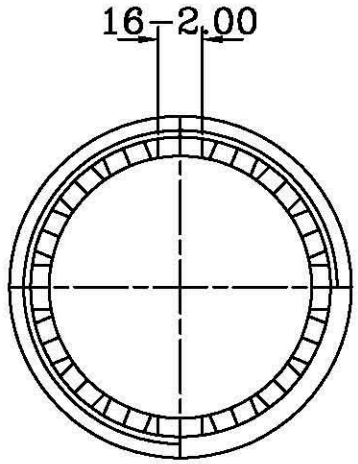

NOTES:FINISH (PLATING THICKNESS IN MICRO-INCHES)
1.BRASS PER QQ-B-626
2.NICKEL PL.100 MIN. THICK OVER COPPER STRIKE
3.GOLD PL.3 MIN THICK OVER NICKEL PL.100 MIN. THICK OVER COPPER STRIKE

ITEM	DESCRIPTION	MATERIAL	Q'TY	FINISHED
4	WASHER	NOTE 1	1	NOTE 2
3	CONTACT PIN	P-Bronze	1	NOTE 3
2	INSULATOR	TEFLON	2	WHITE
1	BODY	NOTE 1	1	NOTE 2

Weltron®

TITLE
UHF DOUBLE FEMALE ADAPTER

PART NO.	44-287	UNITS	MM
		SCALE	FIT
MODEL NO.			
DRAWING NO.		EDITION	A1
CAD FILE	Yin sheng/Yifaxing/SB/SB116		

UNLESS OTHERWISE SPECIFIED TOLERANCES:
0.5-15 = ±0.15
15-30 = ±0.30
30-120 = ±0.60
>120 = ±1.00
ANGLES ±5°

PUBLISH DATE: 2012/12/07

DESIGNED	NQ
DRAWING	NQ
CHECKED	David
APPROVED	Andy

3RD ANGLE