REVISIONS		
ISS	ZONE	DESCRIPTION\PER REQUEST\DATE
A4	ALL	
V	OPEN	
	OPEN	
	CLOSED	

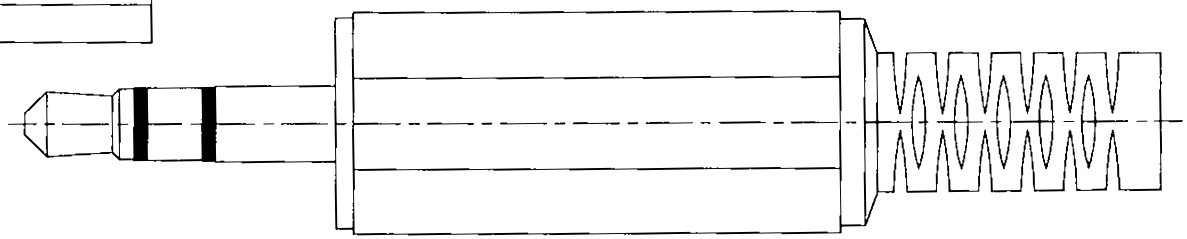

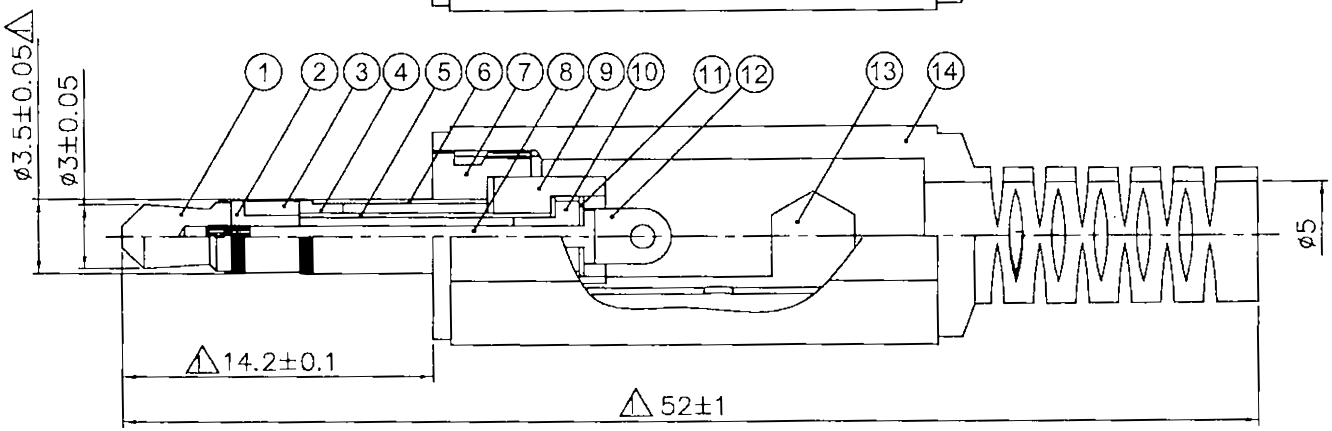

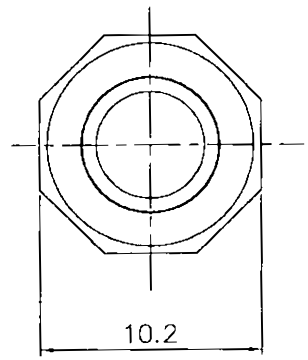

NO.	DESCRIPTION	MATERIAL	FINISH	Q'TY	DRAWING NO.
4	(PLASTIC SHELL)	ABS	(BLACK)	1	1601070003
13	(S-TERMINAL)	H62	(NICKEL)	1	
12	(R-TERMINAL)	H62	(NICKEL)	1	
11	(T-TERMINAL)	H62	(NICKEL)	1	
10	(INSULATOR)	ABS	(BLUE)	1	
9	(INSULATOR)	ABS	(BLUE)	1	
8	(BOLT)	A3	(NICKEL)	1	
7	(BRASS BASE)	H59-1	(NICKEL)	1	
6	(SLEEVE)	H62	(NICKEL)	1	
5	(SLEEVE)	H62	(NICKEL)	1	
4	(INSULATOR)	ABS	(BLACK)	1	
3	(MEDIUM COVER)	H62	(NICKEL)	1	
2	(INSULATOR)	ABS	(BLACK)	1	
1	(TIP)	H59-1	(NICKEL)	1	

DIMENSIONS ARE IN MILLIMETERS	
UNLESS OTHERWISE SPECIFIED TOLERANCES ANGLES = ±5° UP TO 6 = ±0.2 6–40 = ±0.4 40–120 = ±0.6 120–315 = ±1 ABOVE 315 = ±1.6	
THIRD_ANGLE	
SCALE	3/1

APPROVED	刘飞	DATE	2020.12.10
CHECKED	许立朋	DATE	2020.12.10
DRAWN	江镇涛	DATE	2020-12-07
FILE NO.			
ERP LINK:	7010003		

Weltron®

TITLE
3.5mm STEREO PLUG W / PLASTIC HANDLE, OD:4mm

PART NO.	REV.
44-295	A4